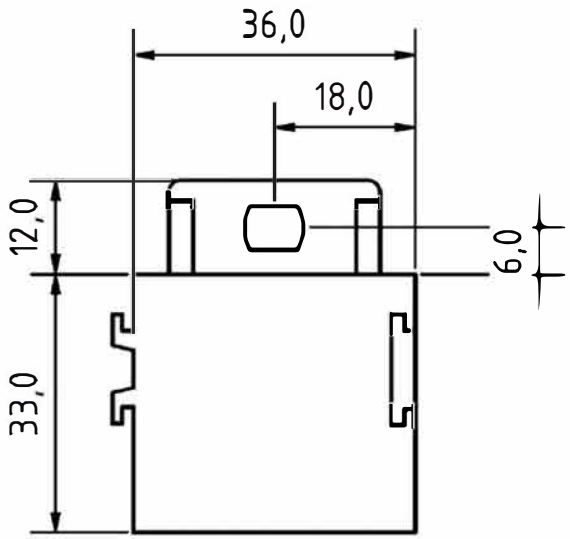

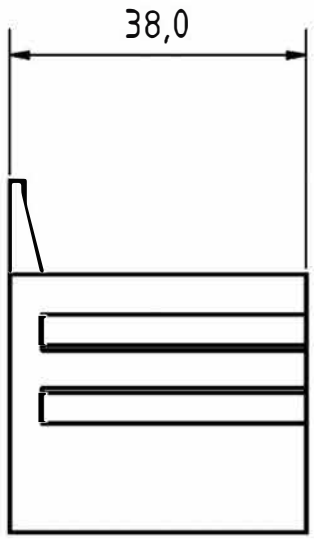

with bracket

3x 9,5mm

2x 6,3mm

4x 2,8mm

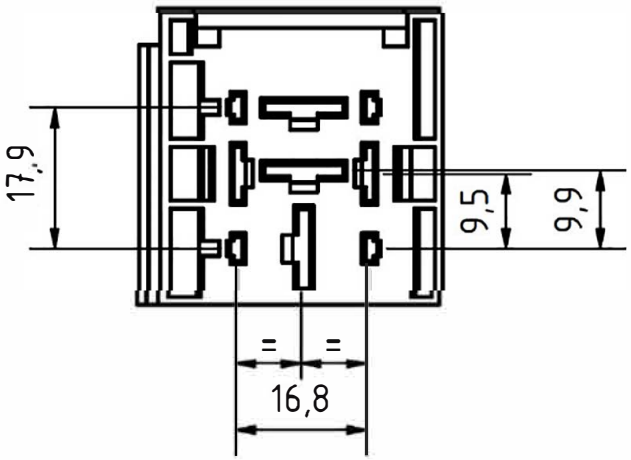

							Socket	
				Scale			Socket for change-over HD-Relay	Part No. MRS 500009
Index	Version	Date	Name					